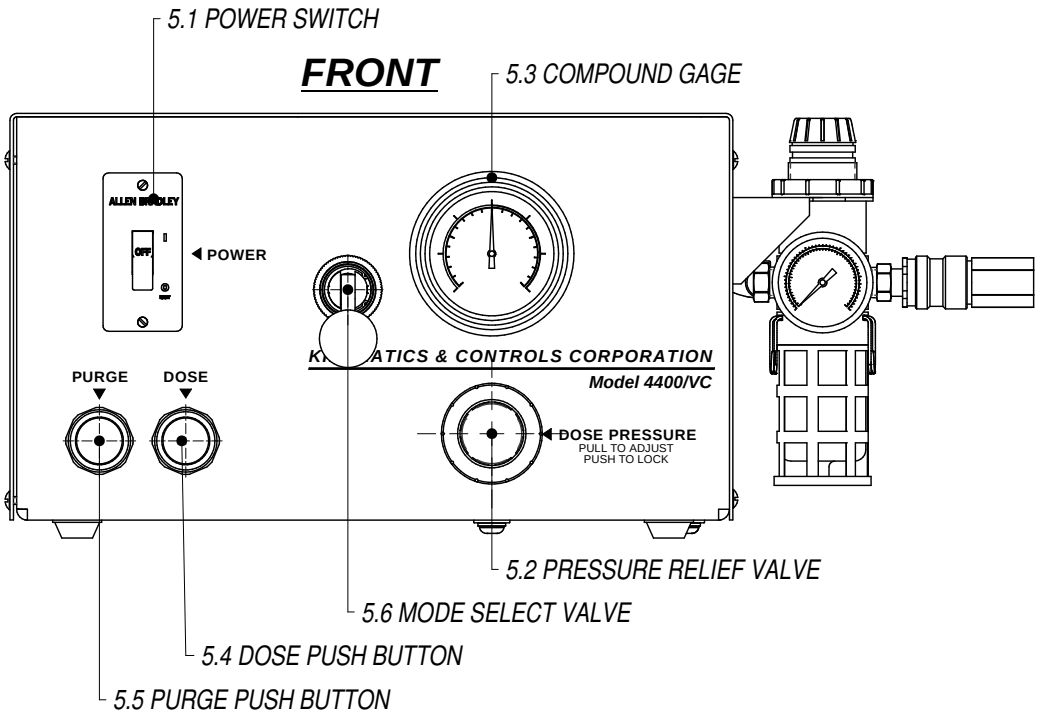
5.1 POWER SWITCH
FRONT
5.3 COMPOUND GAGE
ALLEN BRADLEY
OFF
POWER
PURGE
DOSE
Model 4400/VC
DOSE PRESSURE
PULL TO ADJUST
PUSH TO LOCK
5.2 PRESSURE RELIEF VALVE
5.6 MODE SELECT VALVE
5.4 DOSE PUSH BUTTON
5.5 PURGE PUSH BUTTON

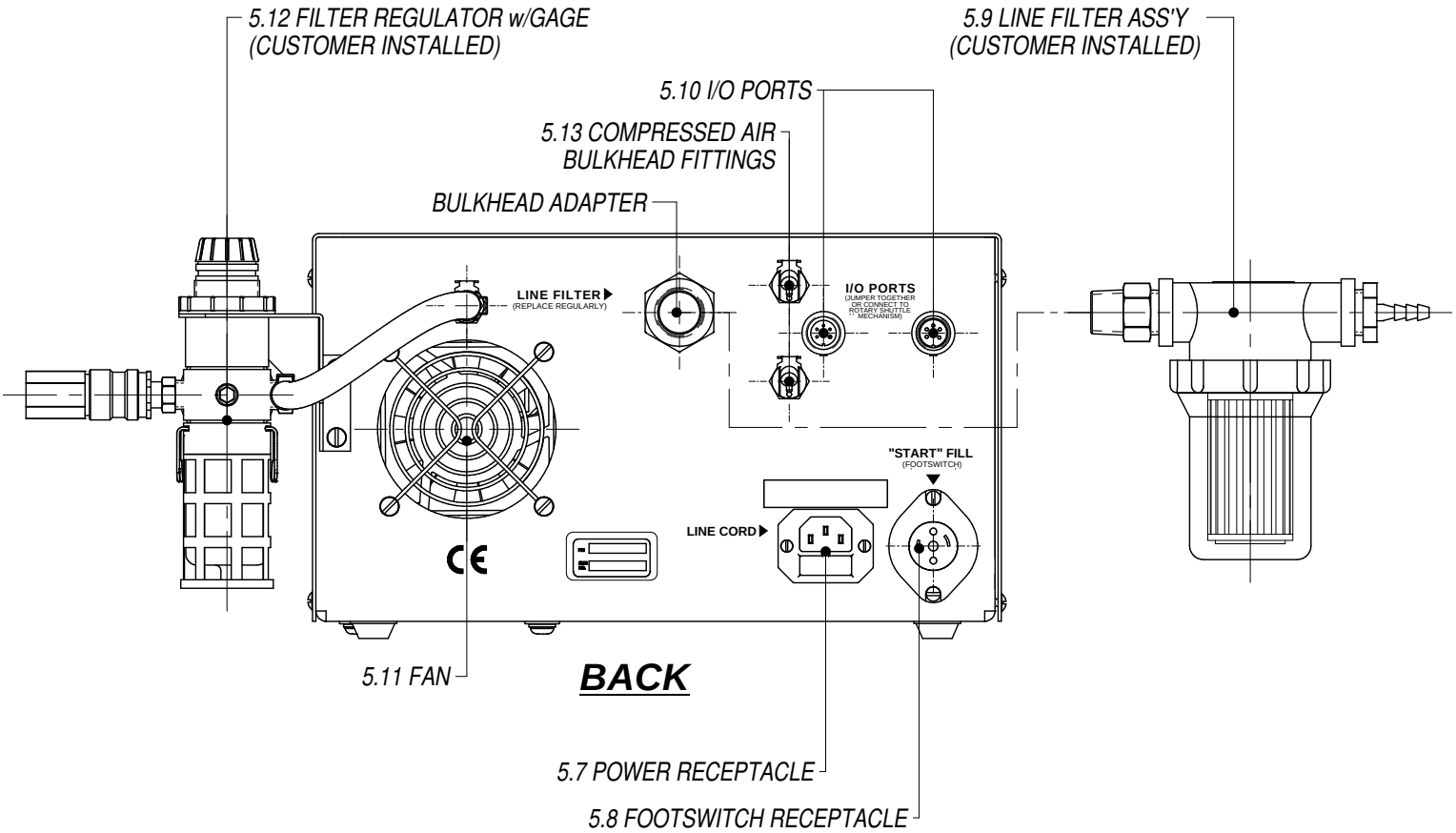
5.12 FILTER REGULATOR w/GAGE
(CUSTOMER INSTALLED)
5.9 LINE FILTER ASS'Y
(CUSTOMER INSTALLED)
5.10 I/O PORTS
5.13 COMPRESSED AIR
BULKHEAD FITTINGS
BULKHEAD ADAPTER
LINE FILTER
(REPLACE REGULARLY)
I/O PORTS
(JUMPER TOGETHER
OR CONNECT TO
ROTARY SHUTTLE
MECHANISM)
"START" FILL
(FOOTSWITCH)
LINE CORD
CE
5.11 FAN
BACK
5.7 POWER RECEPTACLE
5.8 FOOTSWITCH RECEPTACLE